DATE
16.02.2023

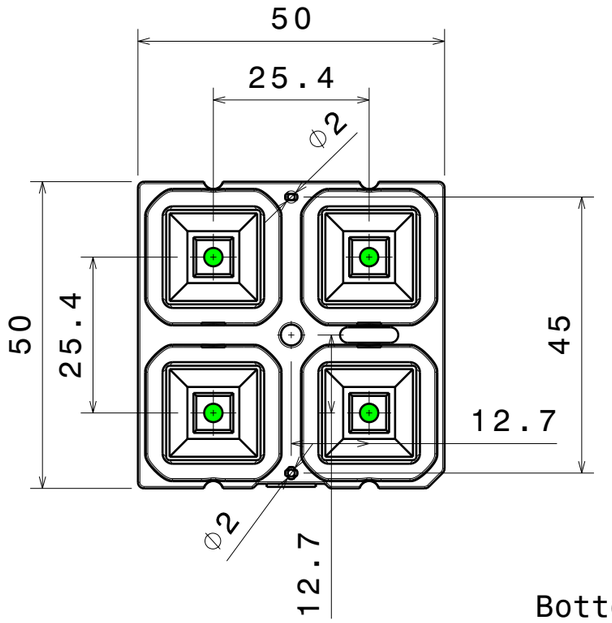

Bottom View

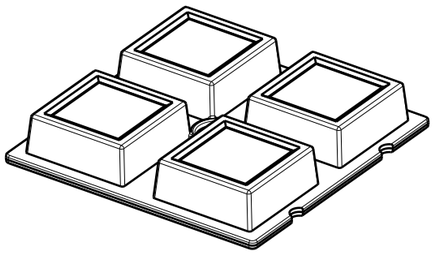

Isometric View

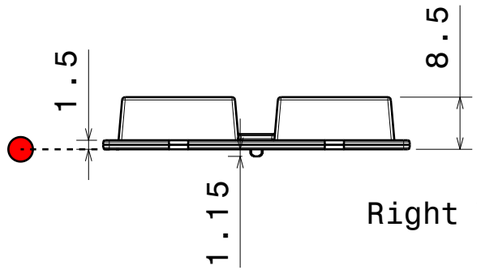

Right View

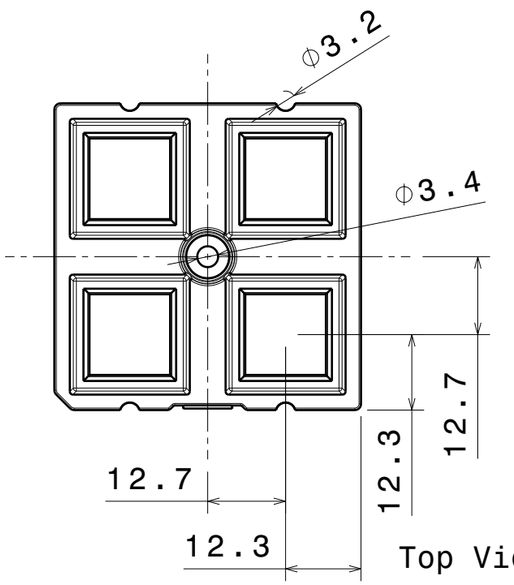

Top View

PART	TYPE	MATERIAL	COLOR / COATING
C19175_AMBER-2X2-W	LENS	PMMA	Amber

Notes

🔴	PCB or heatsink level.
🟢	LED location
	Ensure LED fitting from a product specific 3D model available from www.ledil.com
	For more details about installation please see LEDiL Installation Guide on www.ledil.com

MECHANICAL DRAWING

PRODUCT AMBER

LEDiL

Plastic moulding general tolerances according to DIN 16901-130 and applies if not otherwise shown in the drawing. Silicone moulding general tolerances according to ISO 3302-1 Class M3 and applies if not otherwise shown in the drawing.

FIRST ANGLE PROJECTION:

This drawing is the property of LEDiL Oy. It may not be copied or otherwise distributed without prior written permission from LEDiL Oy.

SCALE 1:1 | WEIGHT - | A3 | SHEET 1/1